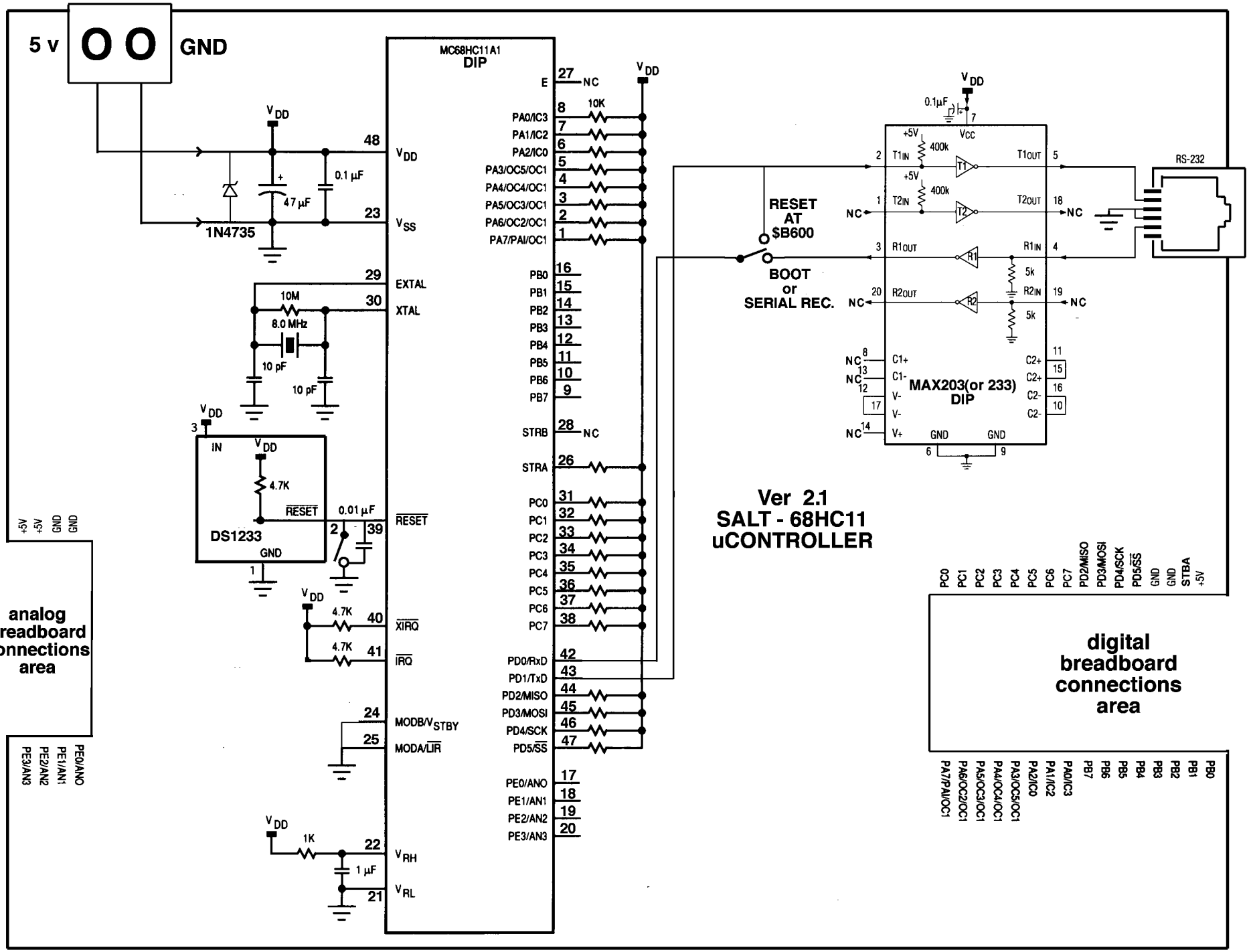
5 v
GND
MC68HC11A1
DIP
VDD
VSS
EXTAL
XTAL
RESET
XIRQ
IRQ
MODB/VSTBY
MODA/LIR
VRH
VRL
E
STRB
STRA
PA0/IC3
PA1/IC2
PA2/IC0
PA3/OC5/OC1
PA4/OC4/OC1
PA5/OC3/OC1
PA6/OC2/OC1
PA7/PAI/OC1
PB0
PB1
PB2
PB3
PB4
PB5
PB6
PB7
PC0
PC1
PC2
PC3
PC4
PC5
PC6
PC7
PD0/RxD
PD1/TxD
PD2/MISO
PD3/MOSI
PD4/SCK
PD5/SS
PE0/AN0
PE1/AN1
PE2/AN2
PE3/AN3
1N4735
47 µF
0.1 µF
10M
8.0 MHz
10 pF
10 pF
DS1233
IN
GND
4.7K
0.01 µF
10K
1K
1 µF
RESET AT $B600
BOOT or SERIAL REC.
MAX203(or 233)
DIP
T1IN
T2IN
R1OUT
R2OUT
T1OUT
T2OUT
R1IN
R2IN
C1+
C1-
V-
V+
C2+
C2-
Vcc
400k
5k
0.1µF
RS-232
Ver 2.1
SALT - 68HC11
uCONTROLLER
analog breadboard connections area
digital breadboard connections area
+5V
+5V
GND
GND
PE0/AN0
PE1/AN1
PE2/AN2
PE3/AN3
PC0
PC1
PC2
PC3
PC4
PC5
PC6
PC7
PD2/MISO
PD3/MOSI
PD4/SCK
PD5/SS
GND
GND
STBA
+5V
PA7/PAI/OC1
PA6/OC2/OC1
PA5/OC3/OC1
PA4/OC4/OC1
PA3/OC5/OC1
PA2/IC0
PA1/IC2
PA0/IC3
PB7
PB6
PB5
PB4
PB3
PB2
PB1
PB0