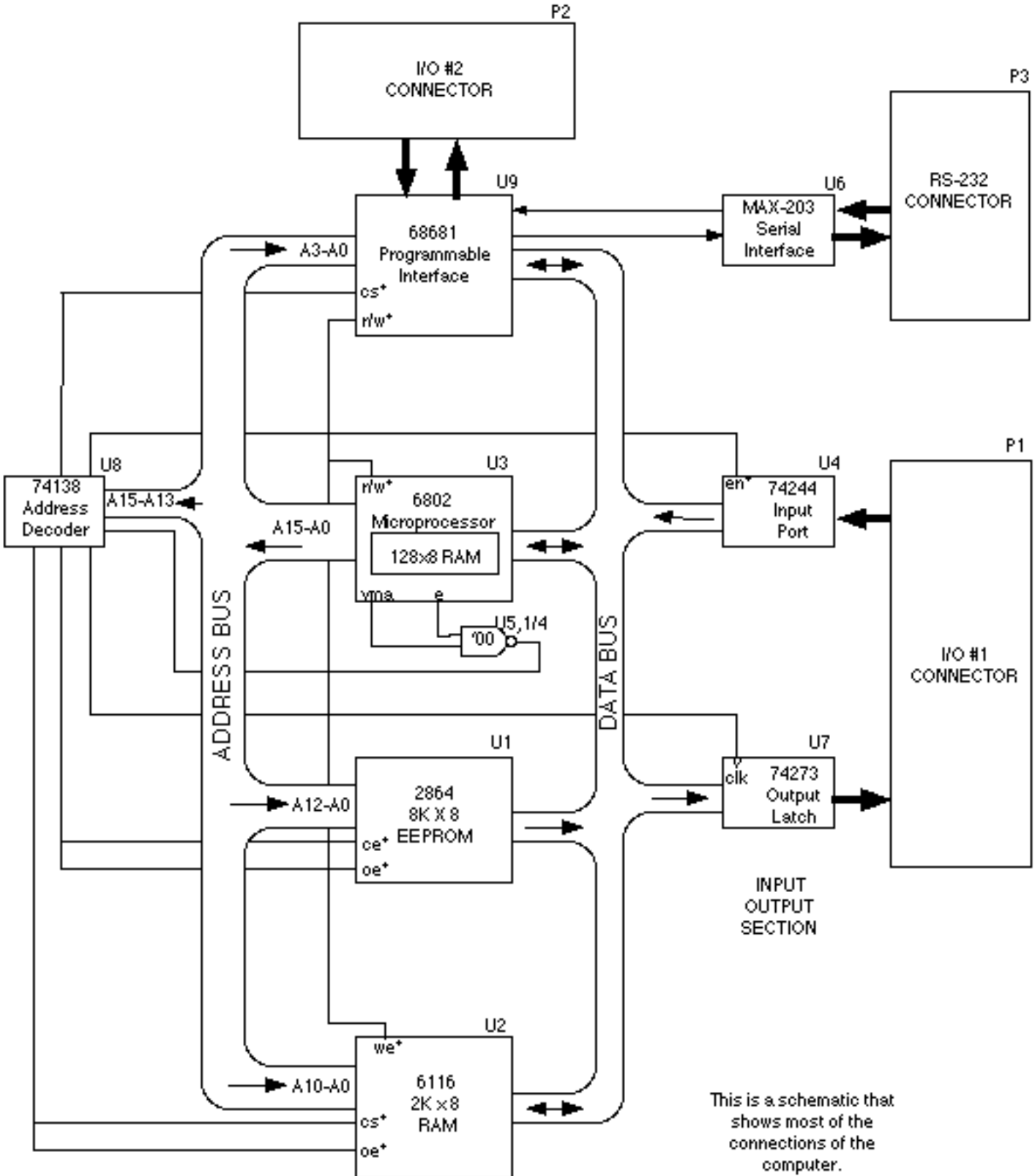

This is a schematic that shows most of the connections of the computer.
To see the actual location of each part look at CIRCUIT BOARD LAYOUT.
For detailed connections and pin numbers see the PIN LIST.

SALT 6802 COMPUTER